# Turners

## Basic Condition Guide

| | | | |
|---|---|---|---|
| Report ID: | 28,222,181 | Version: | 2 |
| Created: | 06 Jun 2026 | | |

| | | | |
|---|---|---|---|
| Make: | Tesla | Model: | Model 3 |
| Body Style: | Sedan | Year: | 2021 |
| Rego No.: | NSF811 | Rego Expiry: | 21 Sep 2026 |
| WoF Expiry: | 19 Jun 2027 | Odometer: | 50,146 Kms |
| Good No.: | 28222181 | VIN: | LRW3F7FA0MC316116 |
| Next Service: | | Service History: | No |

**Note: This report is not a warranty**

This report is a guide only. Consideration is made for age and mileage. Parts have not been dismantled or diagnostic testing undertaken. The vehicle has been driven up to 50km/h from cold. The Vendor recommends a full mechanical inspection prior to purchase and this can be arranged for an additional charge.

**Key**

S = Scratch R = Rust C = Crack * = Decals W = Significant scuffs
D = Dent PT = Paint defect P = Pin dent SC = Stone Chips

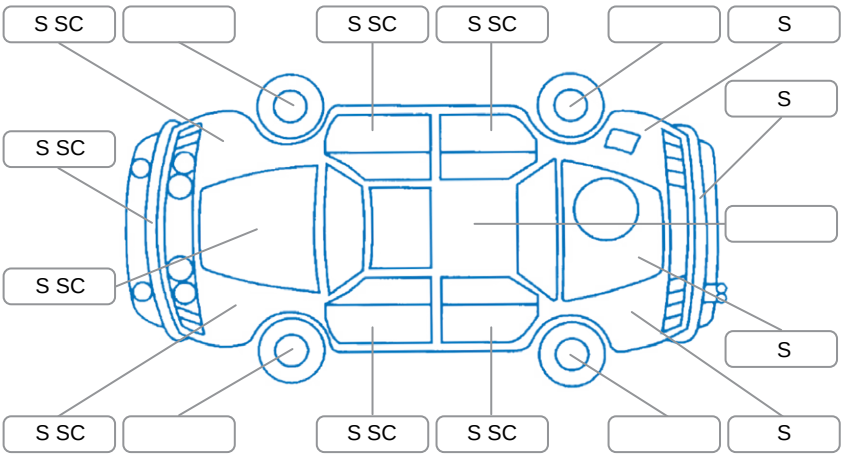


Note: some defects and blemishes may not be displayed in the diagram

**Body Inspection Comments**

Tire inflation device is in the boot

| | |
|---|---|
| Conditions During Body Inspection | Dry |

**Under Carriage and Under Bonnet Inspection Comments**

**Interior Comments**

| | |
|---|---|
| Seats: | Good |
| Carpets: | Good |
| Panels: | Good |
| Dashboard: | Good |

**General Comments**

| | |
|---|---|
| Road Conditions During Test Drive | Dry |
| Engine Timing Mechanism | Unknown |
| Evidence of Cam Belt Replacement | ☐ Yes ☐ No Kms |
| Inspected by: | Gary Adams |
| Published by: | Luke Saunders |
| Inspection Date: | 04 Jun 2026 |

| | OK | Requires Attention | N/A |
|---|---|---|---|
| **Engine** | | | |
| Oil level | | | ✔ |
| Smoke & fumes | ✔ | | |
| Engine performance | ✔ | | |
| Noise | ✔ | | |
| Coolant condition | | | ✔ |
| Cooling performance | ✔ | | |
| Radiator / Hoses (visual) | ✔ | | |
| **Transmission** | | | |
| Operation | ✔ | | |
| Noise | ✔ | | |
| Clutch | | | ✔ |
| CV joints | ✔ | | |
| Wheel bearings | ✔ | | |
| **Brakes** | | | |
| Performance | ✔ | | |
| Hand brake | ✔ | | |
| **Tyres** (lowest observed tread depth of tyres) | | | |
| Left front | 4.0 mm | | |
| Right front | 5.0 mm | | |
| Left rear | 5.0 mm | | |
| Right rear | 6.0 mm | | |
| Spare | N/A | | |
| **Suspension** | | | |
| Suspension performance | ✔ | | |
| Steering performance | ✔ | | |
| Shock absorbers | ✔ | | |
| **Air Conditioning / Heater** | | | |
| Operation | ✔ | | |
| **Electrical / Accessories** | | | |
| Head lights | ✔ | | |
| Tail lights | ✔ | | |
| Indicators | ✔ | | |
| Dashboard warning lights | ✔ | | |
| Wipers (front & rear) | ✔ | | |
| Window winder FL | ✔ | | |
| Window winder FR | ✔ | | |
| Window winder RL | ✔ | | |
| Window winder RR | ✔ | | |
| Rear view mirrors | ✔ | | |
| Radio (basic test only) | ✔ | | |
| CD (basic test only) | | | ✔ |
| Number of keys | 1 | | |
| Central locking | ✔ | | |
| Remote locking | | | ✔ |
| Sat. nav. (basic test only) | ✔ | | |
| Reversing camera | ✔ | | |

I have read and understood this condition guide:

**NAME** _____ **SIGNATURE** _____