Turners

Basic Condition Guide

Report ID:	28,003,337	Version:	1
Created:	06 Mar 2026		

Make:	Ssangyong	Model:	Korando
Body Style:	SUV	Year:	2015
Rego No.:	HZP258	Rego Expiry:	23 Aug 2026
WoF Expiry:	02 Jul 2026	Odometer:	157,588 Kms
Good No.:	28003337	VIN:	KPTB0A18SFP202488
Next Service:	125000	Service History:	No

Note: This report is not a warranty

This report is a guide only. Consideration is made for age and mileage. Parts have not been dismantled or diagnostic testing undertaken. The vehicle has been driven up to 50km/h from cold. The Vendor recommends a full mechanical inspection prior to purchase and this can be arranged for an additional charge.

Key

S = Scratch R = Rust C = Crack * = Decals W = Significant scuffs
D = Dent PT = Paint defect P = Pin dent SC = Stone Chips

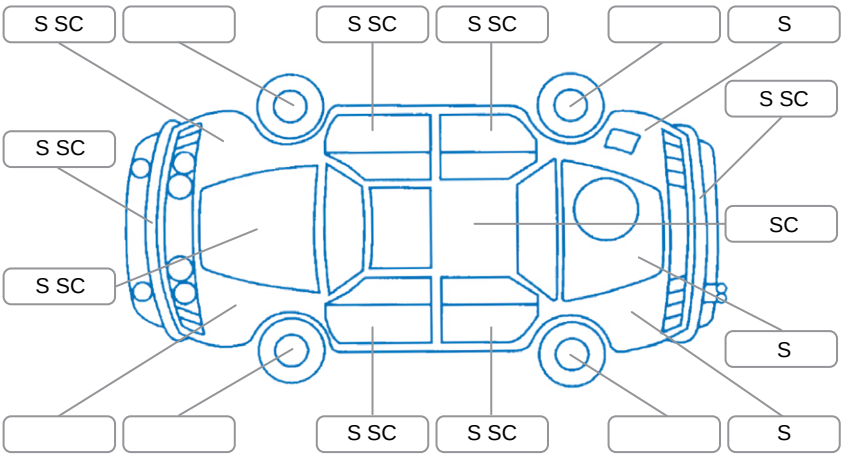

Note: some defects and blemishes may not be displayed in the diagram

Body Inspection Comments

Minor stonechips on windscreen

Conditions During Body Inspection	Dry

Under Carriage and Under Bonnet Inspection Comments

Front wheel drive
Front left CV boot leaking

Interior Comments

Seats:	Good
Carpets:	Good
Panels:	Good
Dashboard:	Good

General Comments

Due for service
CD player won't play CD

Road Conditions During Test Drive	Dry
Engine Timing Mechanism	Timing Chain
Evidence of Cam Belt Replacement	☐ Yes ☐ No Kms
Inspected by:	Cameron Senior-Arnold
Published by:	Jaykib Collins
Inspection Date:	04 Mar 2026

	OK	Requires Attention	N/A
Engine			
Oil level	✔		
Smoke & fumes	✔		
Engine performance	✔		
Noise	✔		
Coolant condition	✔		
Cooling performance	✔		
Radiator / Hoses (visual)	✔		
Transmission			
Operation	✔		
Noise	✔		
Clutch			✔
CV joints	✔		
Wheel bearings	✔		
Brakes			
Performance	✔		
Hand brake	✔		
Tyres (lowest observed tread depth of tyres)			
Left front	4.1 mm		
Right front	3.4 mm		
Left rear	5.2 mm		
Right rear	3.7 mm		
Spare	Yes		
Suspension			
Suspension performance	✔		
Steering performance	✔		
Shock absorbers	✔		
Air Conditioning / Heater			
Operation	✔		
Electrical / Accessories			
Head lights	✔		
Tail lights	✔		
Indicators	✔		
Dashboard warning lights	✔		
Wipers (front & rear)	✔		
Window winder FL	✔		
Window winder FR	✔		
Window winder RL	✔		
Window winder RR	✔		
Rear view mirrors	✔		
Radio (basic test only)	✔		
CD (basic test only)		✔	
Number of keys	2		
Central locking	✔		
Remote locking	✔		
Sat. nav. (basic test only)			✔
Reversing camera			✔

I have read and understood this condition guide:

NAME _____ **SIGNATURE** _____