Turners

Basic Condition Guide

Report ID:	27,997,194	Version:	2
Created:	20 Mar 2026		

Make:	Toyota	Model:	Rav4
Body Style:	SUV	Year:	2015
Rego No.:	JBA833	Rego Expiry:	31 May 2026
WoF Expiry:	10 Mar 2027	Odometer:	168,000 Kms
Good No.:	27997194	VIN:	JTMDFREV80J023111
Next Service:	177966	Service History:	No

Note: This report is not a warranty

This report is a guide only. Consideration is made for age and mileage. Parts have not been dismantled or diagnostic testing undertaken. The vehicle has been driven up to 50km/h from cold. The Vendor recommends a full mechanical inspection prior to purchase and this can be arranged for an additional charge.

Key

S = Scratch R = Rust C = Crack * = Decals W = Significant scuffs
D = Dent PT = Paint defect P = Pin dent SC = Stone Chips

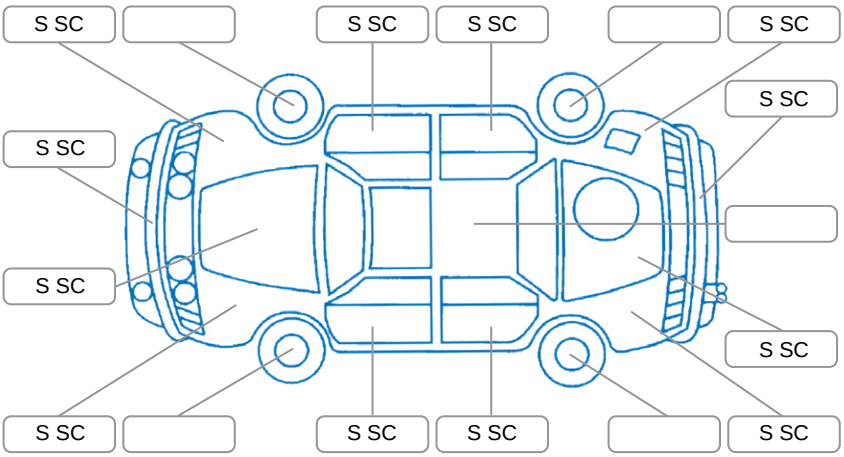

Note: some defects and blemishes may not be displayed in the diagram

Body Inspection Comments

Conditions During Body Inspection	Dry

Under Carriage and Under Bonnet Inspection Comments

All wheel drive

Interior Comments

Seats:	Average
Carpets:	Average
Panels:	Average
Dashboard:	Average

General Comments

Road Conditions During Test Drive	Dry
Engine Timing Mechanism	Timing Chain
Evidence of Cam Belt Replacement	☐ Yes ☐ No Kms
Inspected by:	Uriah Pepene
Published by:	Bobby Zhong
Inspection Date:	01 Mar 2026

	OK	Requires Attention	N/A
Engine			
Oil level	✔		
Smoke & fumes	✔		
Engine performance	✔		
Noise	✔		
Coolant condition	✔		
Cooling performance	✔		
Radiator / Hoses (visual)	✔		
Transmission			
Operation	✔		
Noise	✔		
Clutch			✔
CV joints	✔		
Wheel bearings	✔		
Brakes			
Performance	✔		
Hand brake	✔		
Tyres (lowest observed tread depth of tyres)			
Left front	7.0 mm		
Right front	7.0 mm		
Left rear	4.5 mm		
Right rear	4.5 mm		
Spare	Yes		
Suspension			
Suspension performance	✔		
Steering performance	✔		
Shock absorbers	✔		
Air Conditioning / Heater			
Operation	✔		
Electrical / Accessories			
Head lights	✔		
Tail lights	✔		
Indicators	✔		
Dashboard warning lights	✔		
Wipers (front & rear)	✔		
Window winder FL	✔		
Window winder FR	✔		
Window winder RL	✔		
Window winder RR	✔		
Rear view mirrors	✔		
Radio (basic test only)	✔		
CD (basic test only)	✔		
Number of keys	1		
Central locking	✔		
Remote locking	✔		
Sat. nav. (basic test only)			✔
Reversing camera	✔		

I have read and understood this condition guide:

NAME _____ **SIGNATURE** _____