Turners

Basic Condition Guide

Report ID:	27,973,202	Version:	1
Created:	16 Feb 2026		

Make:	Honda	Model:	CRV
Body Style:	Wagon	Year:	2004
Rego No.:	HLJ378	Rego Expiry:	07 Jun 2026
WoF Expiry:	26 Feb 2027	Odometer:	140,340 Kms
Good No.:	27973202	VIN:	7AT08G7HX14002177
Next Service:	150000	Service History:	No

Note: This report is not a warranty

This report is a guide only. Consideration is made for age and mileage. Parts have not been dismantled or diagnostic testing undertaken. The vehicle has been driven up to 50km/h from cold. The Vendor recommends a full mechanical inspection prior to purchase and this can be arranged for an additional charge.

Key

S = Scratch R = Rust C = Crack * = Decals W = Significant scuffs
D = Dent PT = Paint defect P = Pin dent SC = Stone Chips

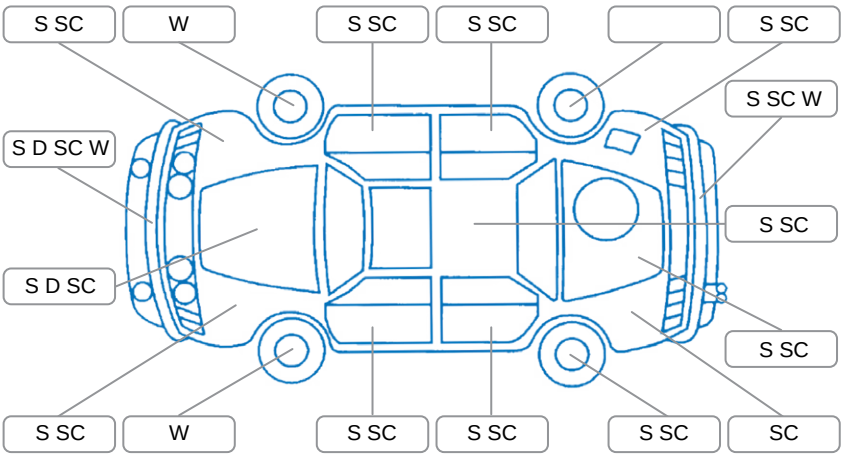

Note: some defects and blemishes may not be displayed in the diagram

Body Inspection Comments

Stone chips front wind screen
Front bumper right side pushed out
Front bumper left side big dent

Conditions During Body Inspection	Dry

Under Carriage and Under Bonnet Inspection Comments

Some weeping around sump

Interior Comments

Seats:	Good
Carpets:	Average
Panels:	Good
Dashboard:	wear on steering wheel

General Comments

Road Conditions During Test Drive	Dry
Engine Timing Mechanism	Timing Chain
Evidence of Cam Belt Replacement	☐ Yes ☐ No Kms
Inspected by:	Melissa Wilson
Published by:	Melissa Wilson
Inspection Date:	16 Feb 2026

	OK	Requires Attention	N/A
Engine			
Oil level	✔		
Smoke & fumes	✔		
Engine performance	✔		
Noise	✔		
Coolant condition	✔		
Cooling performance	✔		
Radiator / Hoses (visual)	✔		
Transmission			
Operation	✔		
Noise	✔		
Clutch			✔
CV joints	✔		
Wheel bearings	✔		
Brakes			
Performance	✔		
Hand brake	✔		
Tyres (lowest observed tread depth of tyres)			
Left front	2.5 mm		
Right front	3 mm		
Left rear	2.5 mm		
Right rear	5.0 mm		
Spare	Yes		
Suspension			
Suspension performance	✔		
Steering performance	✔		
Shock absorbers	✔		
Air Conditioning / Heater			
Operation	✔		
Electrical / Accessories			
Head lights	✔		
Tail lights	✔		
Indicators	✔		
Dashboard warning lights	✔		
Wipers (front & rear)	✔		
Window winder FL	✔		
Window winder FR	✔		
Window winder RL	✔		
Window winder RR	✔		
Rear view mirrors	✔		
Radio (basic test only)	✔		
CD (basic test only)	✔		
Number of keys	2		
Central locking	✔		
Remote locking	✔		
Sat. nav. (basic test only)			✔
Reversing camera			✔

I have read and understood this condition guide:

NAME _____ **SIGNATURE** _____