Turners

Basic Condition Guide

Report ID:	27,921,700	Version:	2
Created:	03 Mar 2026		

Make:	Toyota	Model:	Hilux
Body Style:	Wagon	Year:	1994
Rego No.:	EBJ344	Rego Expiry:	16 Apr 2026
WoF Expiry:	03 Sep 2026	Odometer:	162,533 Kms
Good No.:	27921700	VIN:	7A8H60G0707040006
Next Service:	172,000	Service History:	No

Note: This report is not a warranty

This report is a guide only. Consideration is made for age and mileage. Parts have not been dismantled or diagnostic testing undertaken. The vehicle has been driven up to 50km/h from cold. The Vendor recommends a full mechanical inspection prior to purchase and this can be arranged for an additional charge.

Key

S = Scratch R = Rust C = Crack * = Decals W = Significant scuffs
D = Dent PT = Paint defect P = Pin dent SC = Stone Chips

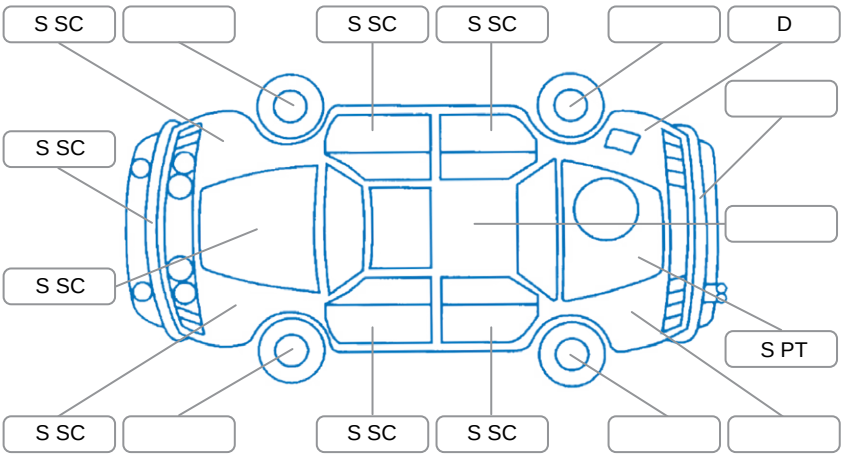

Note: some defects and blemishes may not be displayed in the diagram

Body Inspection Comments

Stone chip on windscreen

Conditions During Body Inspection	Dry

Under Carriage and Under Bonnet Inspection Comments

Interior Comments

Seats:	Average
Carpets:	Average
Panels:	Rhr has something stuck to it
Dashboard:	Average

General Comments

Road Conditions During Test Drive	Dry
Engine Timing Mechanism	Cambelt
Evidence of Cam Belt Replacement	☐ Yes ☑ No Kms
Inspected by:	Gary Adams
Published by:	Luke Saunders
Inspection Date:	20 Jan 2026

	OK	Requires Attention	N/A
Engine			
Oil level	✔		
Smoke & fumes	✔		
Engine performance	✔		
Noise	✔		
Coolant condition	✔		
Cooling performance	✔		
Radiator / Hoses (visual)	✔		
Transmission			
Operation	✔		
Noise	✔		
Clutch			✔
CV joints	✔		
Wheel bearings	✔		
Brakes			
Performance	✔		
Hand brake	✔		
Tyres (lowest observed tread depth of tyres)			
Left front	9.0 mm		
Right front	8.0 mm		
Left rear	6.0 mm		
Right rear	9.0 mm		
Spare	Yes		
Suspension			
Suspension performance	✔		
Steering performance	✔		
Shock absorbers	✔		
Air Conditioning / Heater			
Operation	✔		
Electrical / Accessories			
Head lights	✔		
Tail lights	✔		
Indicators	✔		
Dashboard warning lights	✔		
Wipers (front & rear)	✔		
Window winder FL	✔		
Window winder FR	✔		
Window winder RL	✔		
Window winder RR	✔		
Rear view mirrors	✔		
Radio (basic test only)	✔		
CD (basic test only)	✔		
Number of keys	2		
Central locking	✔		
Remote locking			✔
Sat. nav. (basic test only)			✔
Reversing camera			✔

I have read and understood this condition guide:

NAME _____ **SIGNATURE** _____