Turners

Basic Condition Guide

Report ID:	27,827,613	Version:	3
Created:	26 Feb 2026		

Make:	Mitsubishi	Model:	Outlander
Body Style:	Wagon	Year:	2008
Rego No.:	MKR231	Rego Expiry:	21 May 2026
WoF Expiry:	06 Nov 2026	Odometer:	155,704 Kms
Good No.:	27827613	VIN:	7AT0CJ3MX19300603
Next Service:	165700	Service History:	No

Note: This report is not a warranty

This report is a guide only. Consideration is made for age and mileage. Parts have not been dismantled or diagnostic testing undertaken. The vehicle has been driven up to 50km/h from cold. The Vendor recommends a full mechanical inspection prior to purchase and this can be arranged for an additional charge.

Key

S = Scratch R = Rust C = Crack * = Decals W = Significant scuffs
D = Dent PT = Paint defect P = Pin dent SC = Stone Chips

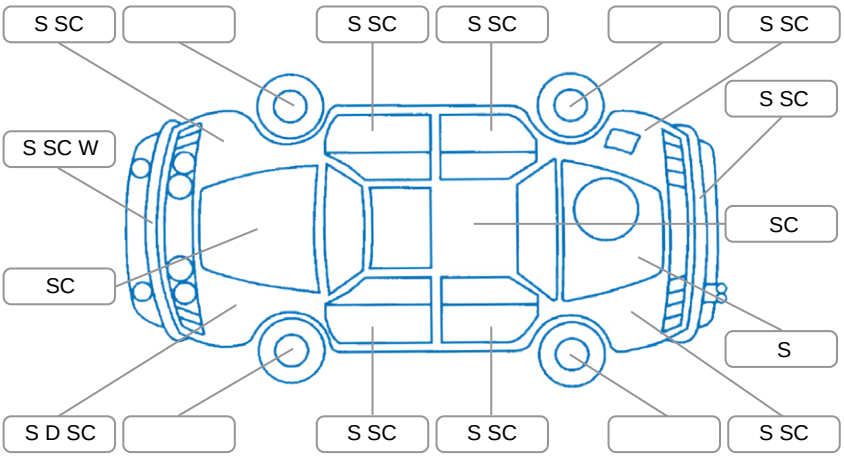

Note: some defects and blemishes may not be displayed in the diagram

Body Inspection Comments

Minor stonechips/crack on windscreen

Conditions During Body Inspection	Dry

Under Carriage and Under Bonnet Inspection Comments

Front wheel drive

Interior Comments

Seats:	Good
Carpets:	Good
Panels:	Good
Dashboard:	Good

General Comments

Navigation not set properly

Road Conditions During Test Drive	Wet
Engine Timing Mechanism	Timing Chain
Evidence of Cam Belt Replacement	☐ Yes ☐ No Kms
Inspected by:	Cameron Senior-Arnold
Published by:	Cameron Senior-Arnold
Inspection Date:	26 Feb 2026

	OK	Requires Attention	N/A
Engine			
Oil level	✔		
Smoke & fumes	✔		
Engine performance	✔		
Noise	✔		
Coolant condition	✔		
Cooling performance	✔		
Radiator / Hoses (visual)	✔		
Transmission			
Operation	✔		
Noise	✔		
Clutch			✔
CV joints	✔		
Wheel bearings	✔		
Brakes			
Performance	✔		
Hand brake	✔		
Tyres (lowest observed tread depth of tyres)			
Left front	3 mm		
Right front	3 mm		
Left rear	8 mm		
Right rear	8 mm		
Spare	Yes		
Suspension			
Suspension performance	✔		
Steering performance	✔		
Shock absorbers	✔		
Air Conditioning / Heater			
Operation	✔		
Electrical / Accessories			
Head lights	✔		
Tail lights	✔		
Indicators	✔		
Dashboard warning lights	✔		
Wipers (front & rear)	✔		
Window winder FL	✔		
Window winder FR	✔		
Window winder RL	✔		
Window winder RR	✔		
Rear view mirrors	✔		
Radio (basic test only)	✔		
CD (basic test only)			✔
Number of keys	1		
Central locking	✔		
Remote locking	✔		
Sat. nav. (basic test only)		✔	
Reversing camera	✔		

I have read and understood this condition guide:

NAME _____ **SIGNATURE** _____