Turners

Basic Condition Guide

Report ID:	27,703,883	Version:	5
Created:	17 Apr 2026		

Make:	Subaru	Model:	Levorg
Body Style:	Wagon	Year:	2014
Rego No.:	QWH753	Rego Expiry:	15 Oct 2025
WoF Expiry:	10 Apr 2027	Odometer:	110,535 Kms
Good No.:	27703883	VIN:	7AT0GF22X24010610
Next Service:		Service History:	No

Note: This report is not a warranty

This report is a guide only. Consideration is made for age and mileage. Parts have not been dismantled or diagnostic testing undertaken. The vehicle has been driven up to 50km/h from cold. The Vendor recommends a full mechanical inspection prior to purchase and this can be arranged for an additional charge.

Key

S = Scratch R = Rust C = Crack * = Decals W = Significant scuffs
D = Dent PT = Paint defect P = Pin dent SC = Stone Chips

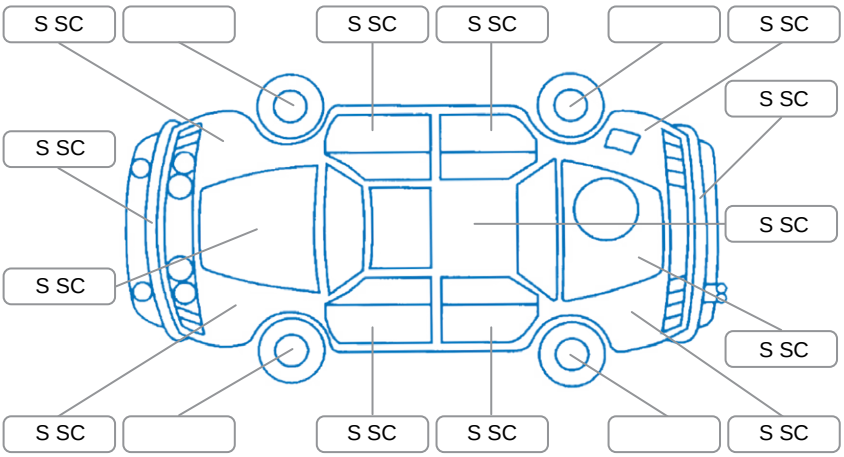

Note: some defects and blemishes may not be displayed in the diagram

Body Inspection Comments

Conditions During Body Inspection	Dry

Under Carriage and Under Bonnet Inspection Comments

Interior Comments

Seats:	marks
Carpets:	Average
Panels:	Average
Dashboard:	Average

General Comments

Only driver window works from main panel.
Wheel alignment required. No inflation kit.
Air conditioning and heating systems along with reverse camera working at time of inspection.

Road Conditions During Test Drive	Dry
Engine Timing Mechanism	Timing Chain
Evidence of Cam Belt Replacement	☐ Yes ☐ No Kms
Inspected by:	Gary Adams
Published by:	Amanda Loader
Inspection Date:	12 Mar 2026

	OK	Requires Attention	N/A
Engine			
Oil level	✔		
Smoke & fumes	✔		
Engine performance	✔		
Noise	✔		
Coolant condition	✔		
Cooling performance	✔		
Radiator / Hoses (visual)	✔		
Transmission			
Operation	✔		
Noise	✔		
Clutch			✔
CV joints	✔		
Wheel bearings	✔		
Brakes			
Performance	✔		
Hand brake	✔		
Tyres (lowest observed tread depth of tyres)			
Left front	5.0 mm		
Right front	5.0 mm		
Left rear	6.0 mm		
Right rear	6.0 mm		
Spare	No		
Suspension			
Suspension performance	✔		
Steering performance		✔	
Shock absorbers	✔		
Air Conditioning / Heater			
Operation	✔		
Electrical / Accessories			
Head lights	✔		
Tail lights	✔		
Indicators	✔		
Dashboard warning lights	✔		
Wipers (front & rear)	✔		
Window winder FL		✔	
Window winder FR	✔		
Window winder RL		✔	
Window winder RR		✔	
Rear view mirrors	✔		
Radio (basic test only)	✔		
CD (basic test only)	✔		
Number of keys	1		
Central locking	✔		
Remote locking	✔		
Sat. nav. (basic test only)			✔
Reversing camera	✔		

I have read and understood this condition guide:

NAME _____ **SIGNATURE** _____