# Turners

## Basic Condition Guide

| | | | |
|---|---|---|---|
| Report ID: | 26,127,280 | Version: | 2 |
| Created: | 24 Feb 2026 | | |

| | | | |
|---|---|---|---|
| Make: | Toyota | Model: | Hiace |
| Body Style: | Van | Year: | 2020 |
| Rego No.: | NDE468 | Rego Expiry: | 21 Apr 2026 |
| WoF Expiry: | 23 Oct 2026 | Odometer: | 103,098 Kms |
| Good No.: | 26127280 | VIN: | JTFTA3AP308013745 |
| Next Service: | overdue | Service History: | Yes |

**Note: This report is not a warranty**

This report is a guide only. Consideration is made for age and mileage. Parts have not been dismantled or diagnostic testing undertaken. The vehicle has been driven up to 50km/h from cold. The Vendor recommends a full mechanical inspection prior to purchase and this can be arranged for an additional charge.

**Key**

S = Scratch R = Rust C = Crack * = Decals W = Significant scuffs
D = Dent PT = Paint defect P = Pin dent SC = Stone Chips

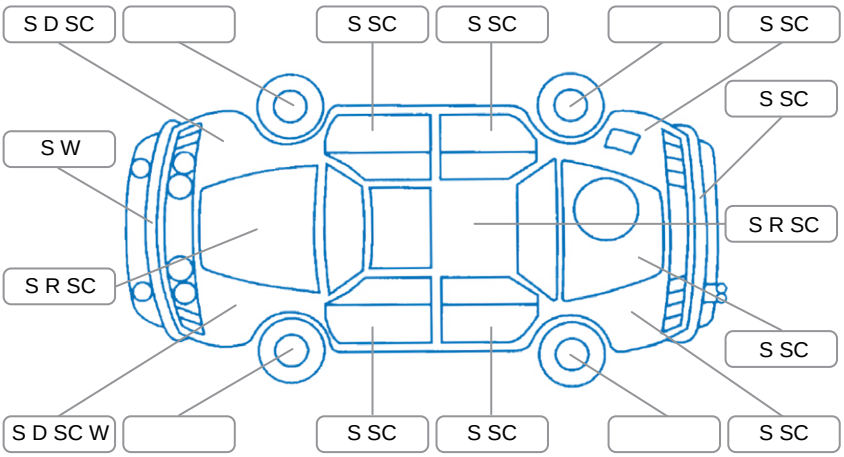


Note: some defects and blemishes may not be displayed in the diagram

**Body Inspection Comments**

| | |
|---|---|
| Conditions During Body Inspection | Dry |

**Under Carriage and Under Bonnet Inspection Comments**

**Interior Comments**

| | |
|---|---|
| Seats: | Average |
| Carpets: | Average |
| Panels: | Average |
| Dashboard: | Average |

**General Comments**

| | |
|---|---|
| Road Conditions During Test Drive | Dry |
| Engine Timing Mechanism | Timing Chain |
| Evidence of Cam Belt Replacement | ☐ Yes ☐ No Kms |
| Inspected by: | Gary Adams |
| Published by: | Amanda Loader |
| Inspection Date: | 20 Feb 2026 |

| | OK | Requires Attention | N/A |
|---|---|---|---|
| **Engine** | | | |
| Oil level | ✔ | | |
| Smoke & fumes | ✔ | | |
| Engine performance | ✔ | | |
| Noise | ✔ | | |
| Coolant condition | ✔ | | |
| Cooling performance | ✔ | | |
| Radiator / Hoses (visual) | ✔ | | |
| **Transmission** | | | |
| Operation | ✔ | | |
| Noise | ✔ | | |
| Clutch | | | ✔ |
| CV joints | ✔ | | |
| Wheel bearings | ✔ | | |
| **Brakes** | | | |
| Performance | ✔ | | |
| Hand brake | ✔ | | |
| **Tyres** (lowest observed tread depth of tyres) | | | |
| Left front | 9.0 mm | | |
| Right front | 9.0 mm | | |
| Left rear | 9.0 mm | | |
| Right rear | 9.0 mm | | |
| Spare | Yes | | |
| **Suspension** | | | |
| Suspension performance | ✔ | | |
| Steering performance | ✔ | | |
| Shock absorbers | ✔ | | |
| **Air Conditioning / Heater** | | | |
| Operation | ✔ | | |
| **Electrical / Accessories** | | | |
| Head lights | ✔ | | |
| Tail lights | ✔ | | |
| Indicators | ✔ | | |
| Dashboard warning lights | ✔ | | |
| Wipers (front & rear) | ✔ | | |
| Window winder FL | ✔ | | |
| Window winder FR | ✔ | | |
| Window winder RL | | | ✔ |
| Window winder RR | | | ✔ |
| Rear view mirrors | ✔ | | |
| Radio (basic test only) | ✔ | | |
| CD (basic test only) | | | ✔ |
| Number of keys | 1 | | |
| Central locking | ✔ | | |
| Remote locking | ✔ | | |
| Sat. nav. (basic test only) | ✔ | | |
| Reversing camera | ✔ | | |

I have read and understood this condition guide:

**NAME** _____

**SIGNATURE** _____