Turners

Basic Condition Guide

Report ID:	26,126,599	Version:	2
Created:	04 Mar 2026		

Make:	Toyota	Model:	Aqua
Body Style:	Hatchback	Year:	2017
Rego No.:	PMT609	Rego Expiry:	13 Apr 2026
WoF Expiry:		Odometer:	125,417 Kms
Good No.:	26126599	VIN:	7AT0H65YX22638696
Next Service:	129,000 Kms	Service History:	Yes

Note: This report is not a warranty

This report is a guide only. Consideration is made for age and mileage. Parts have not been dismantled or diagnostic testing undertaken. The vehicle has been driven up to 50km/h from cold. The Vendor recommends a full mechanical inspection prior to purchase and this can be arranged for an additional charge.

Key

S = Scratch R = Rust C = Crack * = Decals W = Significant scuffs
D = Dent PT = Paint defect P = Pin dent SC = Stone Chips

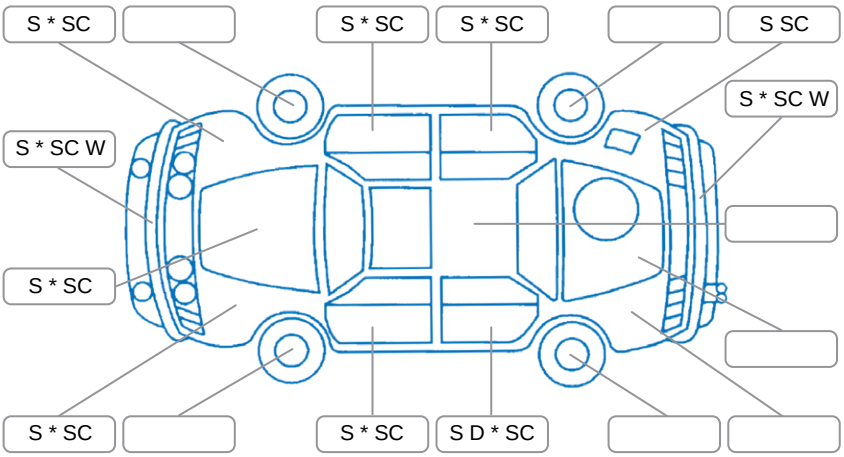

Note: some defects and blemishes may not be displayed in the diagram

Body Inspection Comments

Front wheels are mud/snow tires and min thickness limits are 4mm and Rhf is 3mm.
Jack equipment missing.
Rear bumper poor fit

Conditions During Body Inspection	Dry

Under Carriage and Under Bonnet Inspection Comments

Oil approximately 1/2

Interior Comments

Seats:	Average
Carpets:	Average
Panels:	Average
Dashboard:	Average

General Comments

Air conditioning and heating systems working at time of inspection.

Road Conditions During Test Drive	Dry
Engine Timing Mechanism	Timing Chain
Evidence of Cam Belt Replacement	☐ Yes ☐ No Kms
Inspected by:	Gary Adams
Published by:	Laura Iovine
Inspection Date:	20 Jan 2026

	OK	Requires Attention	N/A
Engine			
Oil level	✔		
Smoke & fumes	✔		
Engine performance	✔		
Noise	✔		
Coolant condition	✔		
Cooling performance	✔		
Radiator / Hoses (visual)	✔		
Transmission			
Operation	✔		
Noise	✔		
Clutch			✔
CV joints	✔		
Wheel bearings	✔		
Brakes			
Performance	✔		
Hand brake	✔		
Tyres (lowest observed tread depth of tyres)			
Left front	6.0 mm		
Right front	3.0 mm		
Left rear	4.0 mm		
Right rear	4.0 mm		
Spare	Yes		
Suspension			
Suspension performance	✔		
Steering performance	✔		
Shock absorbers	✔		
Air Conditioning / Heater			
Operation	✔		
Electrical / Accessories			
Head lights	✔		
Tail lights	✔		
Indicators	✔		
Dashboard warning lights	✔		
Wipers (front & rear)	✔		
Window winder FL	✔		
Window winder FR	✔		
Window winder RL	✔		
Window winder RR	✔		
Rear view mirrors	✔		
Radio (basic test only)	✔		
CD (basic test only)			✔
Number of keys	1		
Central locking	✔		
Remote locking	✔		
Sat. nav. (basic test only)			✔
Reversing camera			✔

I have read and understood this condition guide:

NAME _____ **SIGNATURE** _____