Basic Vehicle Condition Guide

Report ID: 19,104,577
Version: 3
Created: 12 Mar 2019

Make:	Nissan	**Model:**	Wingroad	**Body Style:**	Wagon
Year:	2005	**Registration:**	FSP194	**Reg Expiry:**	31 Jul 2019
WoF Expiry:	11 Mar 2020	**Odometer:**	235,650 Kms	**Good No:**	19104577
VIN:	7AT0DH5GX10456399	**Next Service:**	245000	**Service History:**	No

Note: This report is not a warranty
This report is a guide only. Consideration is made for age and mileage. Parts have not been dismantled or diagnostic testing undertaken. The vehicle has been driven up to 50km/h from cold. The Vendor recommends a full mechanical inspection prior to purchase and this can be arranged for an additional charge.

Key:
S = scratch
D = dent
R = rust
PT = paint defect
C = crack
P = pin dent
* = decals
SC = stone chips
W = significant scuffs

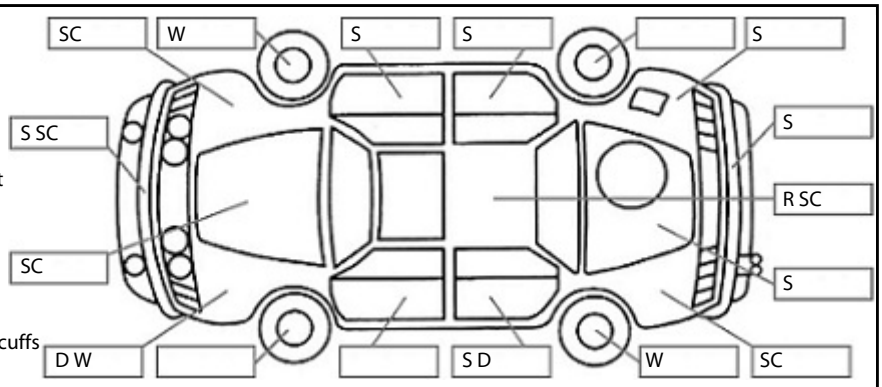

Note: some defects & blemishes may not be displayed in the diagram

Body Inspection Comments

Stone chips on screen.
L/H sill dented & scratched.

Conditions During Body Inspection: Wet

Under Carriage & Under Bonnet Inspection Comments

OK.

Interior Comments

Seats	Average
Carpets	worn.
Panels	Average
Dashboard	Average

General Comments

Good wagon.

Road Conditions During Test Drive: Wet

Engine Timing Mechanism: Timing Chain
Evidence of Cam Belt Replacement: Not Applicable Kms:

	Pass	Fail	N/A
Engine			
Oil level	✔		
Smoke & fumes	✔		
Performance	✔		
Noise	✔		
Cooling System			
Coolant condition	✔		
Performance	✔		
Radiator / Hoses (visual)	✔		
Transmission			
Operation	✔		
Noise	✔		
Clutch			✔
CV joints	✔		
Wheel bearings	✔		
Brakes			
Performance	✔		
Hand Brake	✔		
Tyres (lowest observed tread depth of tyres)			
Left front	2.0 mm		
Right front	2.0 mm		
Left rear	4.0 mm		
Right rear	4.0 mm		
Spare	Yes		
Suspension			
Suspension performance	✔		
Steering performance	✔		
Shock absorbers	✔		
Air Conditioning / Heater			
Operation	✔		
Electrical / Accessories			
Head lights	✔		
Tail lights	✔		
Indicators	✔		
Dashboard warning lights	✔		
Wipers (front & rear)	✔		
Window winder FL	✔		
Window winder FR	✔		
Window winder RL	✔		
Window winder RR	✔		
Rear view mirrors	✔		
Radio (basic test only)	✔		
CD (basic test only)			✔
Number of keys	1		
Central locking	✔		
Remote locking	✔		
Sat. Nav. (basic test only)			✔
Reversing camera			✔

Inspected by: Daryll Timms Date: 25 Feb 2019

I have read and understood this condition guide. Name: ..... Signature: .....