Basic Vehicle Condition Guide

Report ID: 18,640,492
Version: 1
Created: 21 Nov 2018

Make:	Honda	**Model:**	Accord	**Body Style:**	Sedan
Year:	2006	**Registration:**	KTL334	**Reg Expiry:**	05 Feb 2019
WoF Expiry:	16 Jul 2019	**Odometer:**	67,082 Kms	**Good No:**	18640492
VIN:	7AT08G13X17300279	**Next Service:**	74,940kms	**Service History:**	No

Note: This report is not a warranty
This report is a guide only. Consideration is made for age and mileage. Parts have not been dismantled or diagnostic testing undertaken. The vehicle has been driven up to 50km/h from cold. The Vendor recommends a full mechanical inspection prior to purchase and this can be arranged for an additional charge.

Key:
S = scratch
D = dent
R = rust
PT = paint defect
C = crack
P = pin dent
* = decals
SC = stone chips
W = significant scuffs

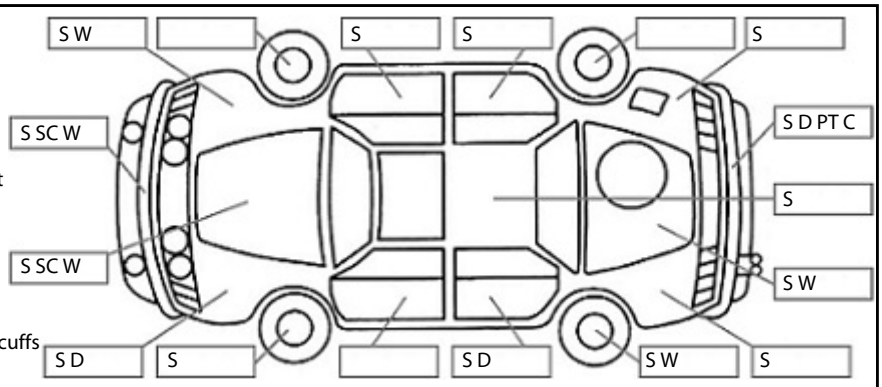

Note: some defects & blemishes may not be displayed in the diagram

Body Inspection Comments

Right front bumper not fitting correctly to guard, clips broken. Plastic Left side wing mirror cover is cracked & broken. Left rear corner of rear bumper is not fitting correctly to left rear guard, broken clips. Crack & hole in left rear bumper & paint cracking on right side of rear bumper.

Conditions During Body Inspection: Wet

Under Carriage & Under Bonnet Inspection Comments

Cuts in rubber on side wall of left front tyre.

Interior Comments

Seats	Good
Carpets	Good
Panels	Good
Dashboard	Good

General Comments

Small burn hole in base of drivers seat & on inner side panel of left front seat base.

Road Conditions During Test Drive: Wet

Engine Timing Mechanism: Timing Chain
Evidence of Cam Belt Replacement: Not Applicable Kms:

	Pass	Fail	N/A
Engine			
Oil level	✔		
Smoke & fumes	✔		
Performance	✔		
Noise	✔		
Cooling System			
Coolant condition	✔		
Performance	✔		
Radiator / Hoses (visual)	✔		
Transmission			
Operation	✔		
Noise	✔		
Clutch			✔
CV joints	✔		
Wheel bearings	✔		
Brakes			
Performance	✔		
Hand Brake	✔		
Tyres (lowest observed tread depth of tyres)			
Left front	5.0 mm		
Right front	3.7 mm		
Left rear	5.0 mm		
Right rear	5.8 mm		
Spare	Yes		
Suspension			
Suspension performance	✔		
Steering performance	✔		
Shock absorbers	✔		
Air Conditioning / Heater			
Operation	✔		
Electrical / Accessories			
Head lights	✔		
Tail lights	✔		
Indicators	✔		
Dashboard warning lights	✔		
Wipers (front & rear)	✔		
Window winder FL	✔		
Window winder FR	✔		
Window winder RL	✔		
Window winder RR	✔		
Rear view mirrors	✔		
Radio (basic test only)	✔		
CD (basic test only)	✔		
Number of keys	1		
Central locking	✔		
Remote locking	✔		
Sat. Nav. (basic test only)			✔
Reversing camera	✔		

Inspected by: Jason Young Date: 20 Nov 2018

I have read and understood this condition guide. Name: ..... Signature: .....